Master Cylinder and Brake Booster
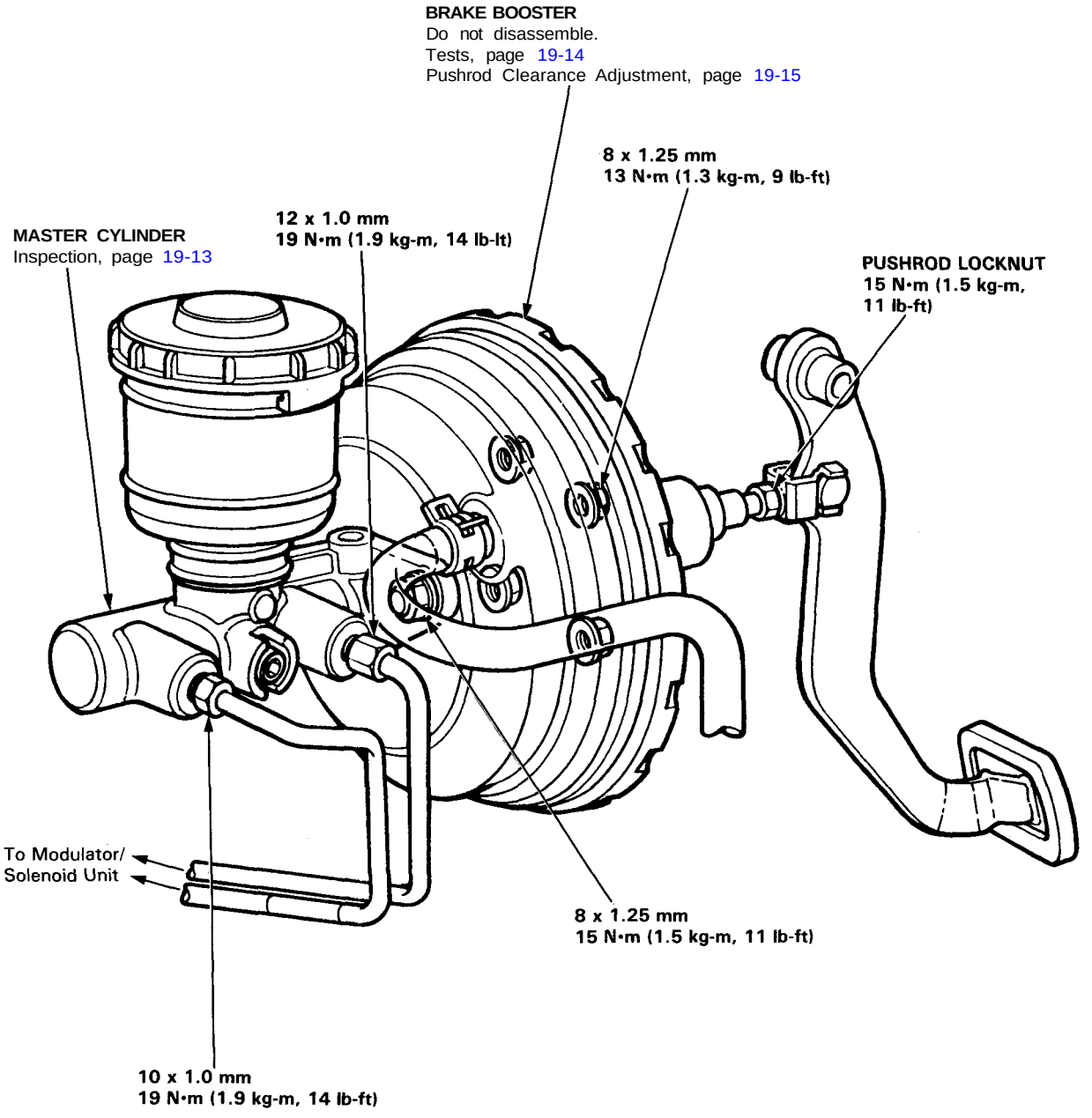
Index/Torque