Water Pump

Illustrated Index
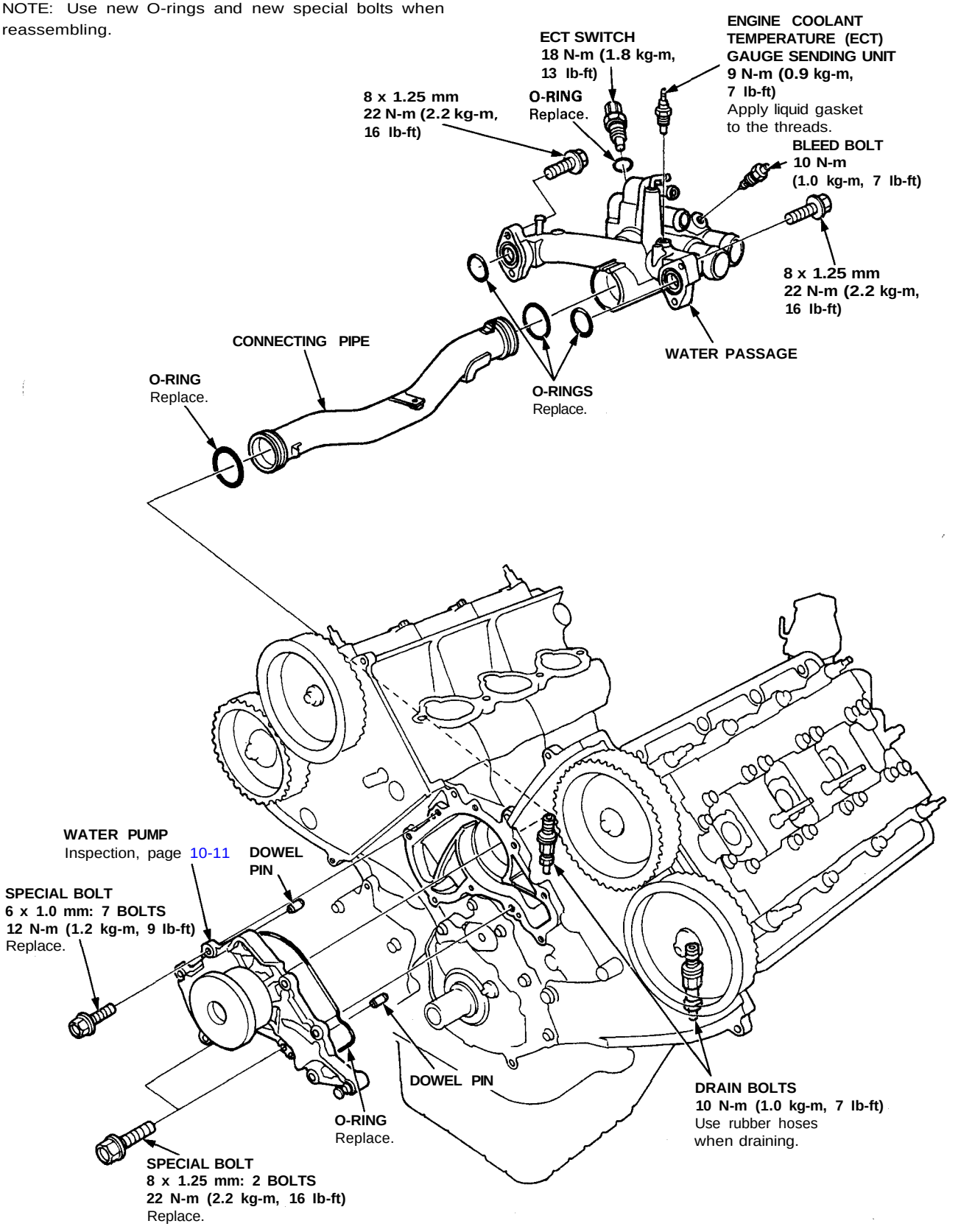
NOTE: Use new O-rings and new special bolts when reassembling.